6. Diagnostics for A/C System Malfunction

A: A/C OR SELF-DIAGNOSIS SYSTEMS DO NOT OPERATE

TROUBLE SYMPTOM:

- Switch LED fails, or switch does not operate.
- Self-diagnosis system does not operate.

WIRING DIAGRAM:

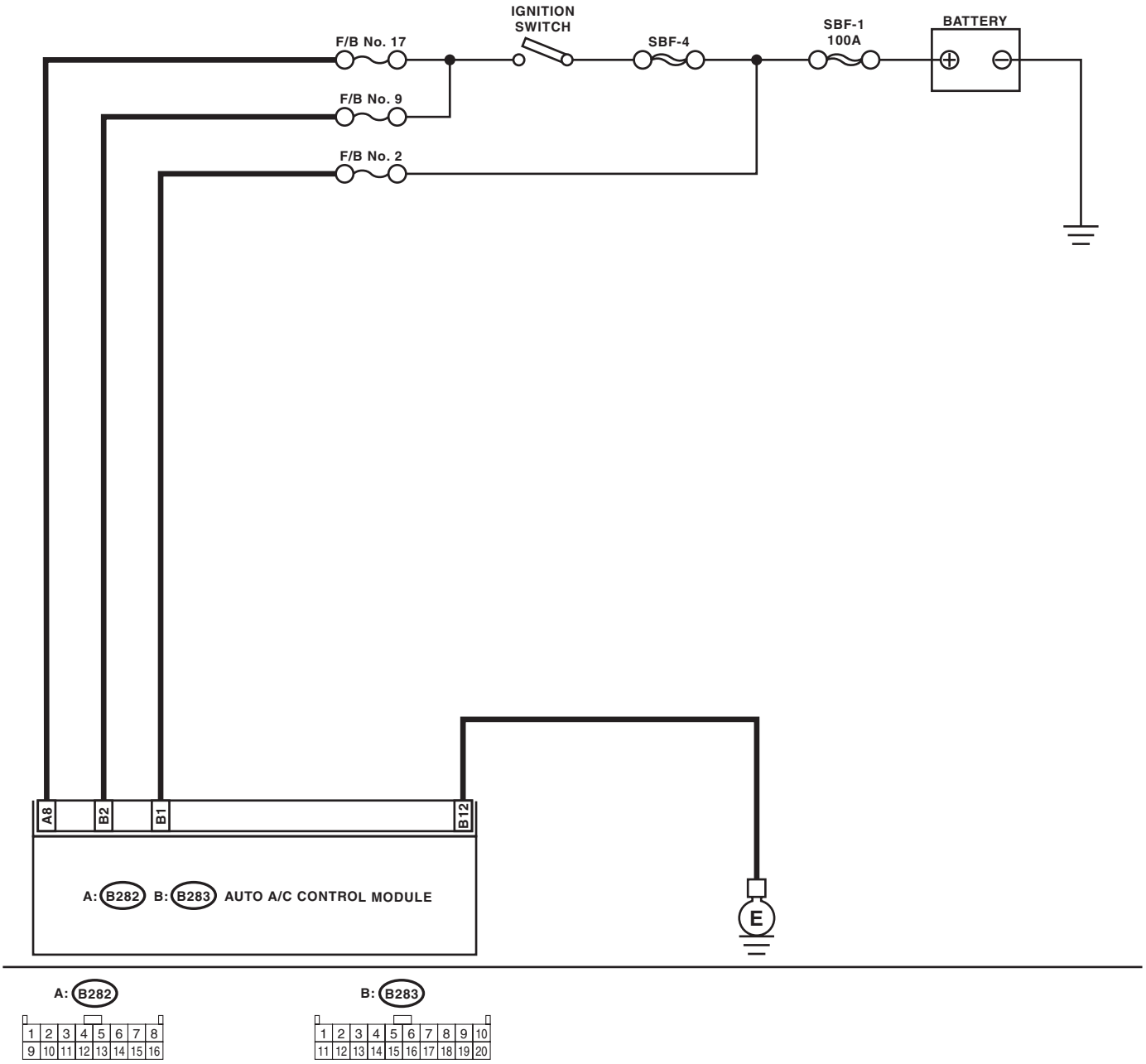

AC-01142

	Step	Check	Yes	No
1	**CHECK FUSE.** 1) Turn the ignition switch to OFF. 2) Remove the fuse No. 2 from main fuse box. 3) Check the condition of fuse.	Is the fuse blown out?	Replace the fuse.	Go to step **2**.
2	**CHECK FUSE.** 1) Turn the ignition switch to OFF. 2) Remove the fuse No. 9 and No. 17 from fuse & relay box. 3) Check the condition of fuse.	Is the fuse blown out?	Replace the fuse.	Go to step **3**.
3	**CHECK AUTO A/C CONTROL MODULE POWER CIRCUIT.** 1) Pull out the auto A/C control module connector. 2) Measure the voltage between auto A/C control module connector terminal and chassis ground after turning the ignition switch to OFF. ***Connector & terminal*** ***(B283) No. 1 (+) — Chassis ground (–):***	Is the voltage 10 V or more?	Go to step **4**.	Check open or short circuit of harness between auto A/C control module and fuse.
4	**CHECK AUTO A/C CONTROL MODULE POWER CIRCUIT.** Measure the voltage between auto A/C control module connector terminal and chassis ground after turning the ignition switch to ACC. ***Connector & terminal*** ***(B283) No. 2 (+) — Chassis ground (–):***	Is the voltage 10 V or more?	Go to step **5**.	Check open or short circuit of harness between auto A/C control module and fuse.
5	**CHECK AUTO A/C CONTROL MODULE POWER CIRCUIT.** Measure the voltage between auto A/C control module connector terminal and chassis ground after turning the ignition switch to the ON position. ***Connector & terminal*** ***(B282) No. 8 (+) — Chassis ground (–):***	Is the voltage 10 V or more?	Go to step **6**.	Check open or short circuit of harness between auto A/C control module and fuse.
6	**CHECK AUTO A/C CONTROL MODULE GROUND CIRCUIT.** Measure the resistance of harness between auto A/C control module and chassis ground. ***Connector & terminal*** ***(B283) No. 12 — Chassis ground:***	Is the resistance less than 5 Ω?	Go to step **7**.	Repair the ground line harness.
7	**CHECK POOR CONTACT.** Check poor contact of auto A/C control module connector.	Is there poor contact in connector?	Repair the connector.	Replace the auto A/C control module.

B: BLOWER FAN DOES NOT ROTATE

TROUBLE SYMPTOM:

- Blower motor does not rotate.
- Blower motor does not rotate in “HI”.

WIRING DIAGRAM:

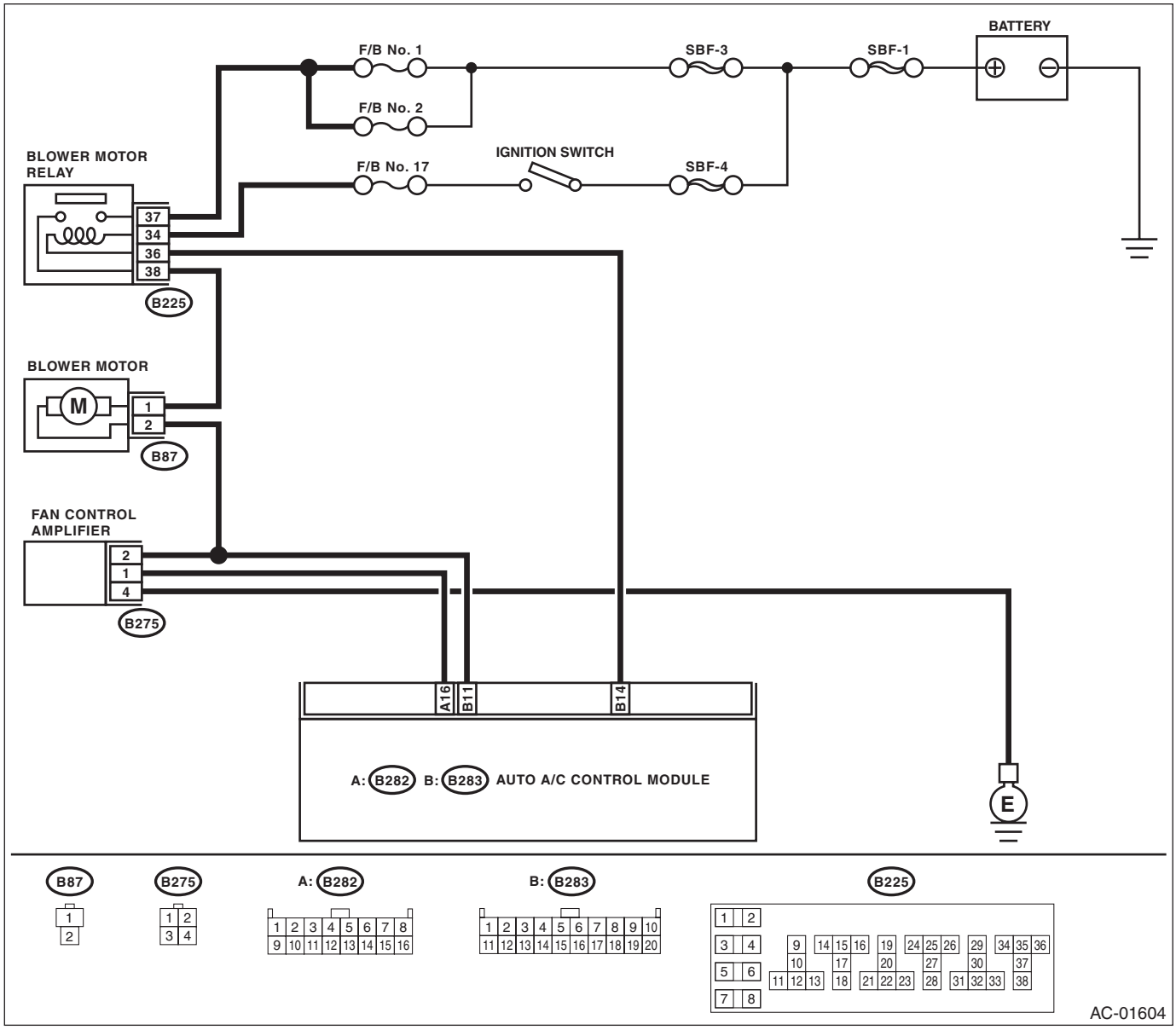

Step		Check	Yes	No
1	**CHECK FUSE.** 1) Remove fuses No. 1, 2 and 17 from fuse & relay box. 2) Check the condition of fuse.	Is any fuse blown out?	Replace the fuse.	Go to step **2**.
2	**CHECK POWER SUPPLY FOR BLOWER MOTOR.** 1) Turn the ignition switch to ON. 2) Turn the fan speed control dial clockwise. 3) Measure the voltage between blower motor and chassis ground. ***Connector & terminal*** ***(B87) No. 1 (+) — Chassis ground (–):***	Is the voltage 10 V or more?	Go to step **3**.	Repair the open circuit of blower motor power supply line harness.
3	**CHECK BLOWER MOTOR RELAY.** 1) Turn the ignition switch to OFF. 2) Remove the blower motor relay. 3) Connect the battery positive (+) terminal to the terminal No. 34 of blower motor connector, and negative (–) terminal to terminal No. 36. 4) Measure the resistance between terminals. ***Terminals*** ***No. 37 — No. 38:***	Is the resistance less than 1 Ω?	Go to step **4**.	Replace the blower motor relay.
4	**CHECK BLOWER MOTOR.** 1) Disconnect the connector from the blower motor. 2) Connect the battery positive (+) terminal to the terminal No. 1 of blower motor connector, and negative (–) terminal to terminal No. 2. 3) Make sure the blower motor runs.	Does the blower motor run?	Go to step **5**.	Replace the blower motor.
5	**CHECK POOR CONTACT.** Check poor contact of auto A/C control module connector.	Is there poor contact in connector?	Repair the connector.	Replace the auto A/C control module.

C: COMPARTMENT TEMPERATURE DOES NOT CHANGE, OR A/C SYSTEM DOES NOT RESPOND PROMPTLY

TROUBLE SYMPTOM:

- The compartment temperature does not change. (Cold air does not come out.)
- The A/C system does not respond quickly.

WIRING DIAGRAM:

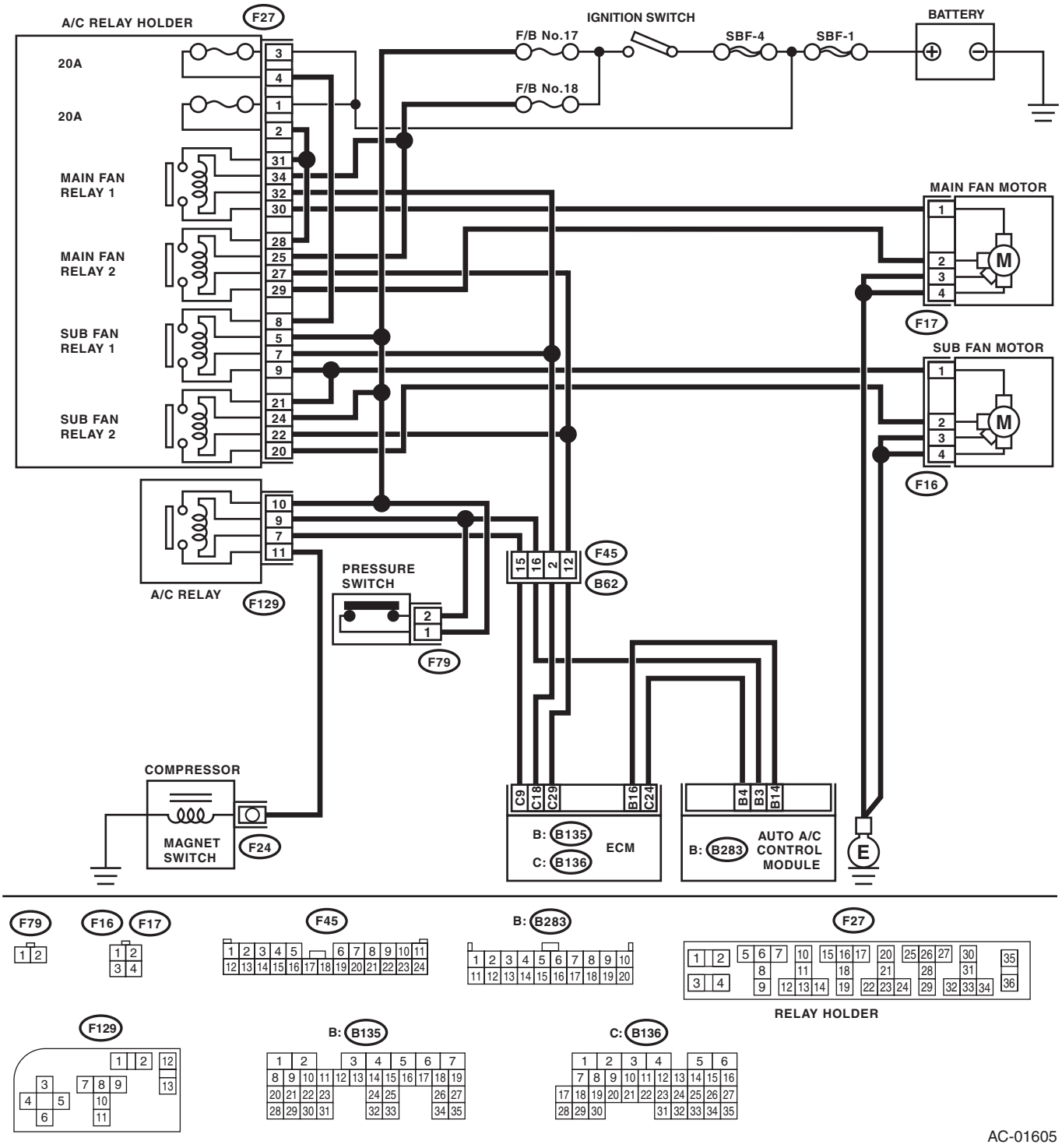

	Step	Check	Yes	No
1	**CHECK FUSE.** 1) Turn the ignition switch to OFF. 2) Remove the fuse No. 2 from the main fuse box. 3) Check the condition of fuse.	Is the fuse blown out?	Replace the fuse.	Go to step **2**.
2	**CHECK POWER SUPPLY TO MAGNET CLUTCH OF A/C COMPRESSOR.** 1) Start the engine and turn the A/C switch to ON. 2) Turn the temperature control dial at maximum cool position. 3) Measure the voltage between the magnet clutch connector and chassis ground. ***Connector & terminal*** ***(F24) No. 1 (+) — Chassis ground (–):***	Is the voltage 10 V or more?	Go to step **3**.	Repair the open circuit of A/C compressor power supply line harness.
3	**CHECK SIGNAL VOLTAGE TO A/C RELAY.** 1) Turn the ignition switch to ON. 2) Turn the A/C switch to ON. 3) Measure the signal voltage between A/C relay and chassis ground. ***Connector & terminal*** ***(F129) No. 9 (+) — Chassis ground (–):***	Is the voltage 10 V or more?	Go to step **4**.	Repair the open circuit in harness of the A/C relay signal circuit.
4	**CHECK A/C RELAY.** Check the A/C relay. <Ref. to AC-36, INSPECTION, Relay and Fuse.>	Does the relay operate normally?	Go to step **5**.	Replace the A/C relay.
5	**CHECK MAIN FAN MOTOR OPERATION.** 1) Start the engine. 2) Turn the A/C switch to ON. 3) Check the operation of the main fan motor.	Does the radiator main fan operate?	Go to step **10**.	Go to step **6**.
6	**CHECK POWER SUPPLY TO MAIN FAN MOTOR.** **CAUTION:** **Be careful not to overheat the engine during repair.** 1) Turn the ignition switch to OFF. 2) Disconnect the connector from the main fan motor. 3) Start the engine, and warm it up until engine coolant temperature rise to 95°C (203°F) higher. 4) Stop the engine and turn the ignition switch to ON. 5) Measure the voltage between main fan motor connector and chassis ground. ***Connector & terminal*** ***(F17) No. 1 (+) — Chassis ground (–):*** ***(F17) No. 2 (+) — Chassis ground (–):***	Is the voltage 10 V or more?	Go to step **7**.	Repair the open circuit of main fan motor power supply circuit harness.
7	**CHECK MAIN FAN MOTOR GROUND CIRCUIT.** 1) Turn the ignition switch to OFF. 2) Measure the resistance between main fan motor connector and chassis ground. ***Connector & terminal*** ***(F17) No. 3 — Chassis ground:*** ***(F17) No. 4 — Chassis ground:***	Is the resistance less than 1 Ω?	Go to step **8**.	Repair the open circuit of the harness between main fan motor connector and chassis ground.
8	**CHECK POOR CONTACT.** Check poor contact of the main fan motor connector.	Is there poor contact in the main fan motor connector?	Repair the poor contact of main fan motor connector.	Go to step **9**.

Step		Check	Yes	No
9	**CHECK MAIN FAN MOTOR.** Connect the battery positive (+) terminal to terminals No. 1 and No. 2, and the ground (–) terminal to terminals No. 3 and No. 4.	Does the main fan rotate?	Repair the poor contact of main fan motor connector.	Replace the main fan motor with a new part.
10	**CHECK SUB FAN MOTOR OPERATION.** Check the operation of the sub fan motor.	Does the radiator sub fan operate?	Go to step **15**.	Go to step **11**.
11	**CHECK POWER SUPPLY TO SUB FAN MOTOR.** **CAUTION:** **Be careful not to overheat the engine during repair.** 1) Turn the ignition switch to OFF. 2) Disconnect the connector from the sub fan motor. 3) Start the engine, and warm it up until engine coolant temperature rise to 100°C (212°F) higher. 4) Stop the engine and turn the ignition switch to ON. 5) Measure the voltage between sub fan motor connector and chassis ground. ***Connector & terminal*** ***(F16) No. 1 (+) — Chassis ground (–):*** ***(F16) No. 2 (+) — Chassis ground (–):***	Is the voltage 10 V or more?	Go to step **12**.	Repair the open circuit of sub fan motor power supply circuit harness.
12	**CHECK SUB FAN MOTOR GROUND CIRCUIT.** 1) Turn the ignition switch to OFF. 2) Measure the resistance between sub fan motor connector and chassis ground. ***Connector & terminal*** ***(F16) No. 3 — Chassis ground:*** ***(F16) No. 4 — Chassis ground:***	Is the resistance less than 1 Ω?	Go to step **13**.	Repair the open circuit of harness between sub fan motor connector and chassis ground.
13	**CHECK POOR CONTACT.** Check for poor contact of sub fan motor connector.	Is there poor contact in the sub fan motor connector?	Repair the poor contact of sub fan motor connector.	Go to step **14**.
14	**CHECK SUB FAN MOTOR.** Connect the battery positive (+) terminal to terminals No. 1 and No. 2, and the ground (–) terminal to terminals No. 3 and No. 4.	Does the sub fan rotate?	Repair the poor contact of sub fan motor connector.	Replace the sub fan motor with a new part.
15	**CHECK EACH SENSOR AND POTENTIOMETER.** Check the sensors and potentiometer for proper operation using the self-diagnostic function. <Ref. to AC(diag)-9, Diagnostic Chart for Self-diagnosis.>	Do each sensors and potentiometer operate normally?	Go to step **16**.	Check the sensor and circuit. <Ref. to AC(diag)-25, Diagnostic Procedure for Sensors.>
16	**CHECK CONNECTION OF ASPIRATOR HOSE.** Make sure that the aspirator hose is connected normally.	Is the aspirator hose connected normally?	Go to step **17**.	Repair the aspirator hose connection.
17	**CHECK EACH ACTUATOR.** Check the actuators for proper operation using the self-diagnostic function. <Ref. to AC(diag)-9, Diagnostic Chart for Self-diagnosis.>	Do the actuators operate normally?	Go to step **18**.	Check the actuator and circuit. <Ref. to AC(diag)-19, Diagnostic Procedure for Actuators.>
18	**CHECK POOR CONTACT.** Check poor contact of auto A/C control module connector.	Is there poor contact in connector?	Repair the connector.	Replace the auto A/C control module.